HELICAL ENGINEERS
dedication to excellence

HELICAL ENGINEERS
Plot No. 541, Industrial Area, Phase- IX, SAS Nagar-Mohali
Tel: 0172-5013405, M. No. 98759-24001
Mail: info@helicalengg.com, Web: www.helicalengg.com, GST No. 03BSJPK7474E1ZO

INTRODUCTION OF "HELICAL ENGINEERS" AS SOLUTION PROVIDER COMPANY RANGING FROM CONSULTANCY & DESIGNING OF INSTRUMENTATION, AUTOMATION & ELECTRICAL SYSTEMS.

Dear Sir,

We are pleased to introduce ourselves as one of the leading Instrumentation & Automation Company with complete Designing, Supply, Calibration, Testing and service / support network.

We also manufacture PLC Based & Semi Automated Control Panel for all types of control application. (Like Boiler Control, Special Purpose Machines-SPM etc.)

We are herewith enclosing our Company's Profile complete with detailing our range of works, list of man power, list of tools and machinery, valued customers, performance and goodwill certificates from our customers.

We solicit your valued enquiries and shall be available for seeking inputs to offer the complete cost effective and optimized solution as desired by you. Please feel free to call us for any clarification.

We assure you of our best and prompt services at all times.

Thanking you,

Yours faithfully,

For Helical Engineers

HELICAL ENGINEERS
dedication to excellence

HELICAL ENGINEERS
Plot No. 541, Industrial Area, Phase- IX, SAS Nagar-Mohali
Tel: 0172-5013405, M. No. 98759-24001
Mail: info@helicalengg.com, Web: www.helicalengg.com, GST No. 03BSJPK7474E1ZO

Welcome to Helical Engineering Solutions

- We can offer the widest and most extensive quality solutions on different products as per our client's budget.
- We specialize in different applications across the industry. We provide technical consultancy for turnkey projects in the field of Instrumentation, Automation & Electrical trade.
- We undertake Supply, Installation, Testing & Commissioning of various projects in the field of Instrumentation, Automation & Electrical with our own chain of Panel builders.
- We also accommodate bulk general supply orders for Instrumentation, Automation & Electrical (industrial & commercial) goods as per the client needs on very competitive market rates.

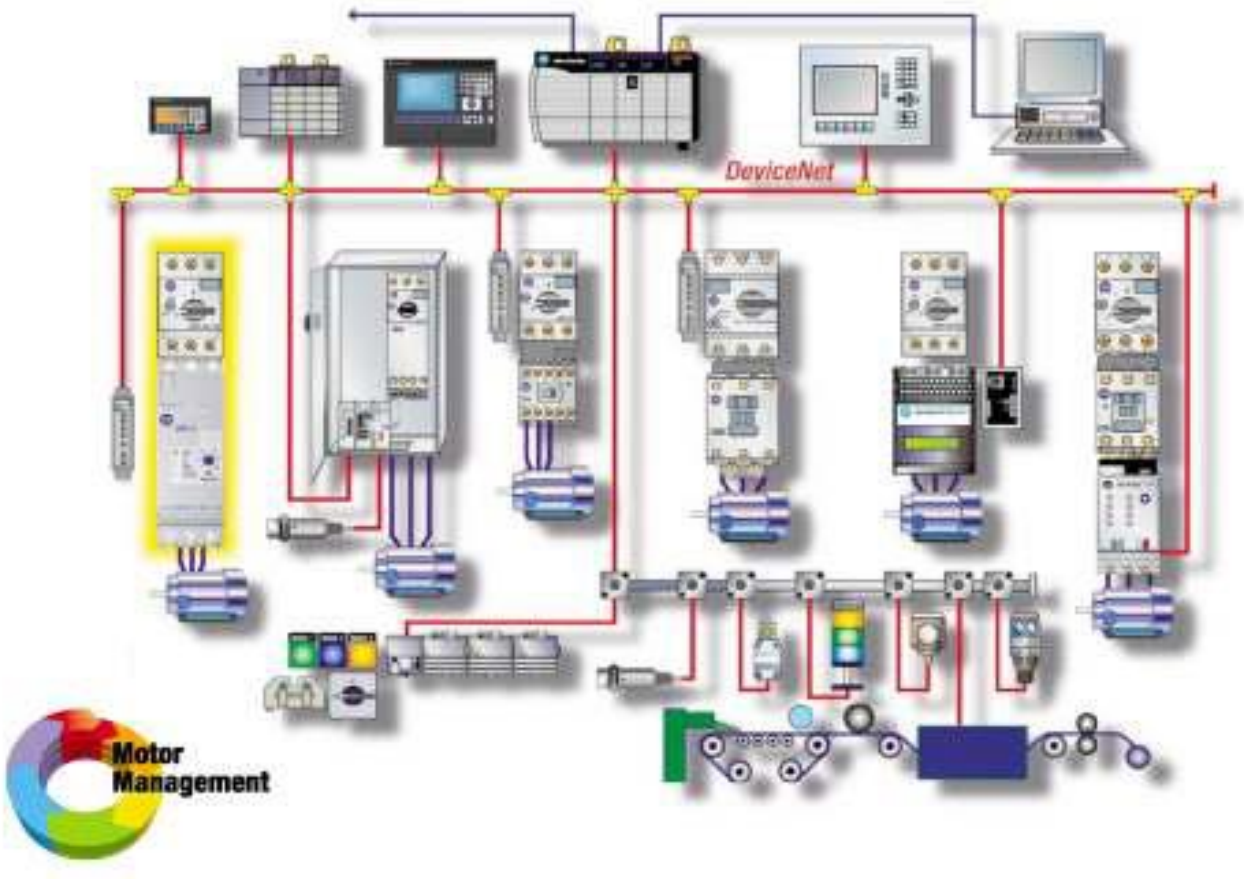

HELICAL ENGINEERS
dedication to excellence

HELICAL ENGINEERS
Plot No. 541, Industrial Area, Phase- IX, SAS Nagar-Mohali
Tel: 0172-5013405, M. No. 98759-24001
Mail: info@helicalengg.com, Web: www.helicalengg.com, GST No. 03BSJPK7474E1ZO

About Us

We are a Group of Young, Dynamic, Experienced & Proficient Engineers having sound knowledge in the field of various aspects of Electrical, Automation & instrumentation Engineering.

We have handled numerous projects in the different parts of country. Projects that we had executed so far comprise of Industrial Projects like in Paper Mill, Cement Plant, Captive Power plant, Sugar mills, Water Treatment Plant, Effluent Treatment Plant, Sewerage Treatment Plant, Sub Stations and other various different production houses.

One of the remarkable edges that we have on the other groups is that we have a sound support of responsible technical team with us at the time of handling the technical issues at various site situations which is undoubtedly a very important characteristic that a project team must have in order to run the project smoothly.

HELICAL ENGINEERS
Plot No. 541, Industrial Area, Phase- IX, SAS Nagar-Mohali
Tel: 0172-5013405, M. No. 98759-24001
Mail: info@helicalengg.com, Web: www.helicalengg.com, GST No. 03BSJPK7474E1ZO

Our Team

Our group comprise of the flourishing combination of young and experienced individuals. Each member of our team has gained experience from the elite and prestigious group of companies & has proven themselves not only in the Indian sub continental region but also on the world map.

We also have a group of senior experts of serving in various fields across the industries that provide their valuable time & technical expertise in different phases of a project. Which is the only reason, we consider our edge over other service providers in this field.

The level of technical expertise our team members have is invaluable & above all the level of diversified projects these people have executed in the field of Paper Mill, Cement Plant, Captive Power plant, Sugar mills, Water Treatment Plant, Effluent Treatment Plant, Sewerage Treatment Plant, Sub Stations commercial projects, Automation related to all the fields mentioned & manufacturing plants etc. practically by their own experience is of utmost importance for our execution, planning & all the pre planning related activities in order to steer our client in the right direction.

HELICAL ENGINEERS
dedication to excellence

HELICAL ENGINEERS
Plot No. 541, Industrial Area, Phase- IX, SAS Nagar-Mohali
Tel: 0172-5013405, M. No. 98759-24001
Mail: info@helicalengg.com, Web: www.helicalengg.com, GST No. 03BSJPK7474E1ZO

THE RANGE OF OUR WORKS / PRODUCTS

We have following range work performed by team Helical, qualified & experienced technician and technical advisers. Every stage of our production work is carefully supervised and monitored for reliability, quality and prompt services as per the IS guidelines.

❖ . **In Instrumentation: -**

- ✓ Supply, Installation & Commissioning of all types of Process instruments like Flow Meter, Pressure Transmitter, Level Transmitter, Temperature Sensor, Ultrasonic/Radar Level & Flow Transmitter, Liquid Analyzer, Gas Analyzer.
- ✓ Calibration & Testing of all types of Instruments.
- ✓ All types of Process indicators & Controllers.
- ✓ Single Loop & Multi-Loop PID Controllers.
- ✓ Paperless Recorder.
- ✓ Temperature Scanners.
- ✓ Pneumatic & Electric Actuated Control Valves.
- ✓ Signal Splitter/Isolator & Transducers.

❖ In AUTOMATION: -

- ✓ PLC Based Control Panels for all types of application & Special Purpose Machines.
- ✓ PLC, HMI & SCADA Systems.
- ✓ Semi-Automated Panels for small applications.
- ✓ Boiler control panel with SCADA System.
- ✓ Re-configuration & Programming of all types of PLC & SCADA Systems.
- ✓ Automation of Paper Machines, Boilers, Turbines, Water Treatment Plant`s, Effluent Treatment Plant`s, Sewerage Treatment Plant`s etc.

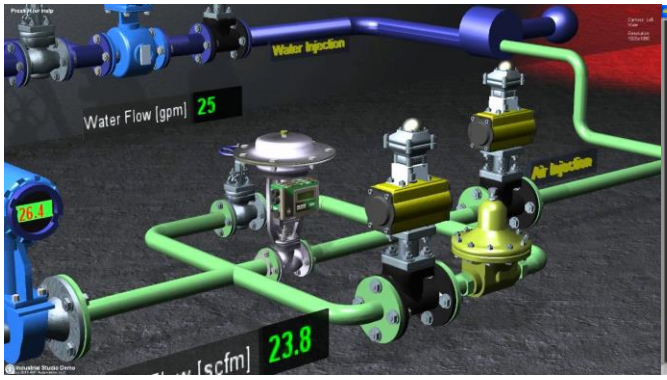

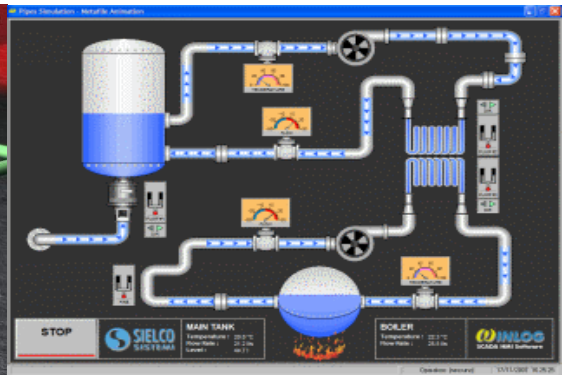

HELICAL ENGINEERS
Plot No. 541, Industrial Area, Phase- IX, SAS Nagar-Mohali
Tel: 0172-5013405, M. No. 98759-24001
Mail: info@helicalengg.com, Web: www.helicalengg.com, GST No. 03BSJPK7474E1ZO

❖ **In Electrical: -**
Supply, Installation & Testing of all types of Electrical Panels:

- ✓ PCC (Power Control Center) Panels.
- ✓ MCC (Motor Control Center) Panels.
- ✓ APFC (Automatic Power Factor Control) Panels.
- ✓ PLC/DCS Panels.
- ✓ AC Drive/VFD Panels.
- ✓ Testing of Electrical Panels.
- ✓ Testing of Earth Resistance (Earth Pit`s).
- ✓ Supply & Commissioning of AC Drive/VFD.
- ✓ Supply & Commissioning of Protection Relay for HT & LT Panels.

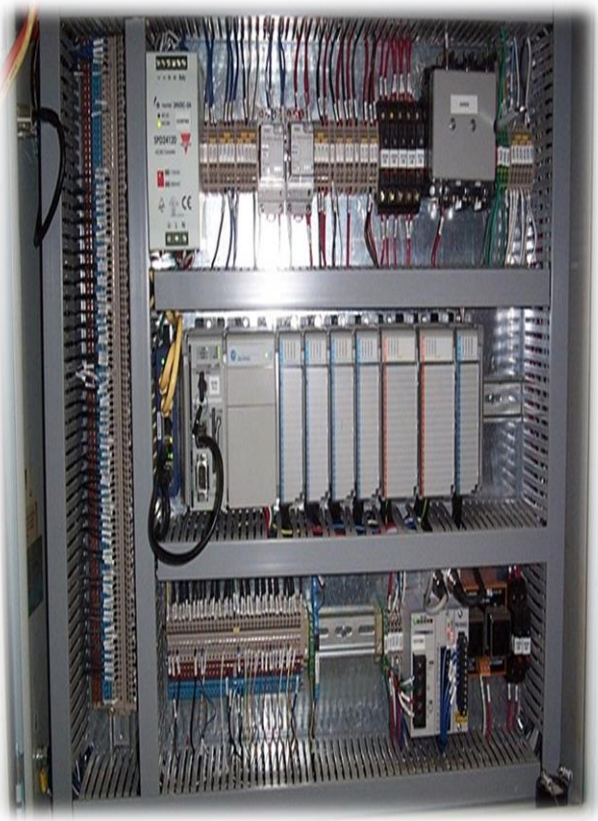

❖ POWER MANAGEMENT & CONTROL SYSTEMS: -

- ✓ PLC Based AMF (Auto Main Failure) Panels.
- ✓ Auto DG & Power Control System.
- ✓ DG Synchronizing Panels.
- ✓ Power Monitoring & Control System.
- ✓ Auto Load Sharing System.

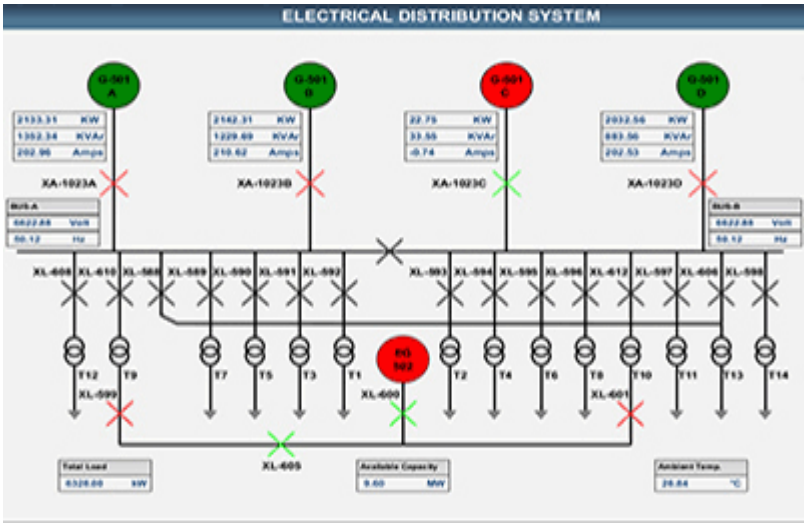

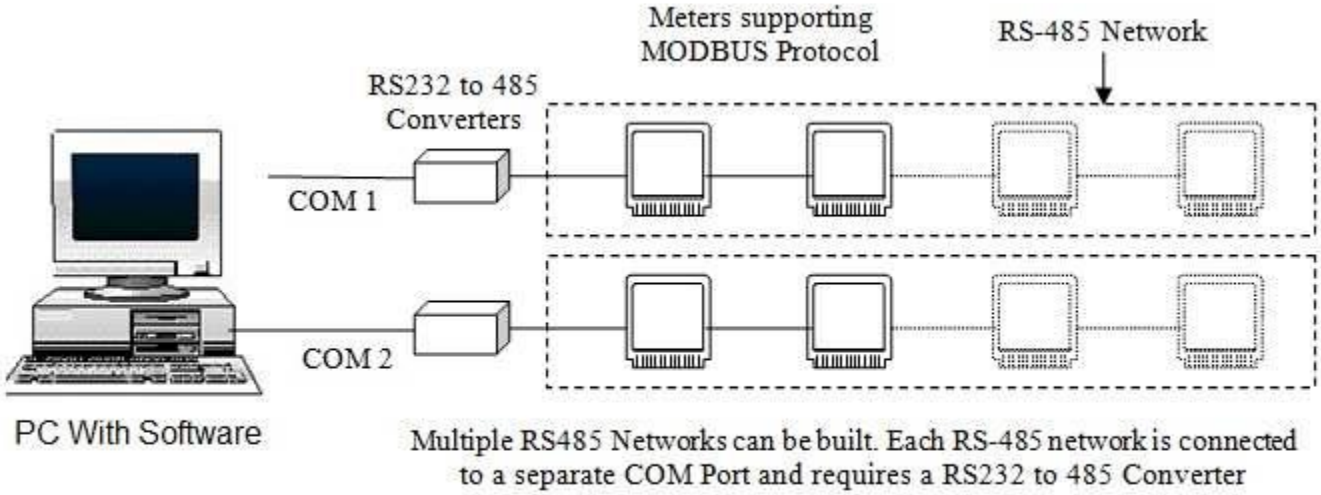

Interfacing MODBUS meters on RS-485 Network

HELICAL ENGINEERS
dedication to excellence

HELICAL ENGINEERS
Plot No. 541, Industrial Area, Phase- IX, SAS Nagar-Mohali
Tel: 0172-5013405, M. No. 98759-24001
Mail: info@helicalengg.com, Web: www.helicalengg.com, GST No. 03BSJPK7474E1ZO

Details of Major Work Executed

Sr. No.	CUSTOMER NAME & ADDRESS	TYPE OF JOB
1.	DSM Sinochem Pharmaceutical Tonsa, Ropar (Punjab)	BMS System for Lotus & Tabla Plant with PLC & SCADA System
2.	NHPC Limited Chamera (H.P)	Supply & Installation of Flow Meters along with Paperless Recorder.
3.	Bilt Paper Mill Limited Yamunanagar (Haryana)	PLC Panel along with SCADA System for NCG Burner
4.	Shreyans Paper Mill Tonsa- Ropar (Punjab)	Supply & Installation of PLC Panel along with SCADA for Recovery Plant Boiler
5.	NTPC Deenbandhu Chhotu Ram Thermal Power Plant Yamunanagar	Installation of Gas Analyzer (O2) on boiler
6.	Satia Paepr Mill Muktsar Punjab	Supply & Installation of PLC Panel along with SCADA software for Continuous Digester
7.	Indain Acrylic Limited Biwanigarh Punjab	Supply & Installation of PLC Panel
8.	Sidhesvery Paepr Mill Limited, Muzaffarnagar	Supply & Installation of PLC Panel along with SCADA System for Paper Machine Steam Condensate System
9.	SMS Simag India Ltd. Bhubaneswar Orissa	Supply of PLC & SCADA System for Power Management System
10.	Eastman Ludhiana (Punjab)	Supply & Installation of Liquid Analyzer along with Remote Monitoring
11.	MES Dehradun (U.K)	Automation of 11kV Sub Station
12.	Public Health Department Panchkula Haryana	Installation of PLC & SCADA System at Sector-1 Water Treatment Plant (Automation of Water Treatment Plant)
13.	Onyx (P&D) System Ind, Area Barwala Panchkula Haryana	Supply & Installation of PLC Panel for Special Purpose Machines

GOALS & TARGET

We have a team which is way different than others in every aspect of professional & individual approach presently working in this field. Our teams' approach towards the work is much more focused & coordinated in every aspect. We do not leave any fragment & neither we give our **'CLIENT's** an opportunity to complain about our services. We never believe in saying **'NO'** to our customer's demand, which is what makes us different than any other of our competitor in this field. On top of that our exceedingly competent professional team is always available to solve any set of complexity in project or at site, to which some of other competitor lack in relation to us.

We aim to create a brand image comparable to some of the successful names in this field by setting the highest possible standards in respect to our competitors. We will take our group to a level that will not only make its presence felt to everyone else but also after accomplishing a job for a client we do not need to remind ourselves to the CLIENT instead we will establish ourselves to this much extent in satisfying the client that they will not be left with any option of uncertainty in their minds about our services & our work.

Company Contact Details

For Automation Products & Project Based Enquiries
Mr. S. K Dhari Tel. 0172-5013405, M. No. +91-98759-24001
Plot No. 549, Industrial Area, Phase-IX, Mohali-160062
E-mail: - info@helicalengg.com, www.helicalengg.com